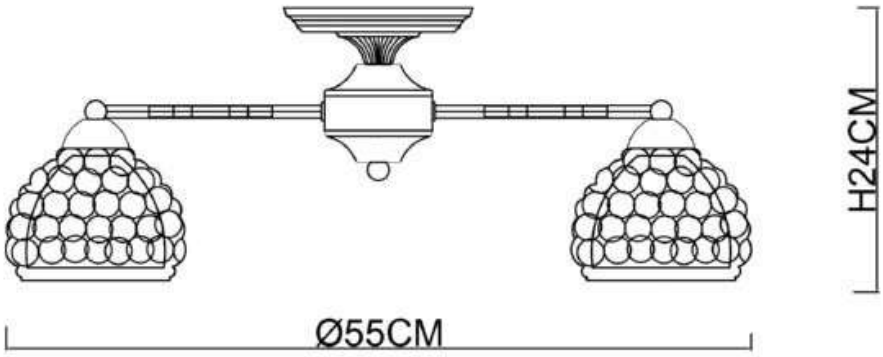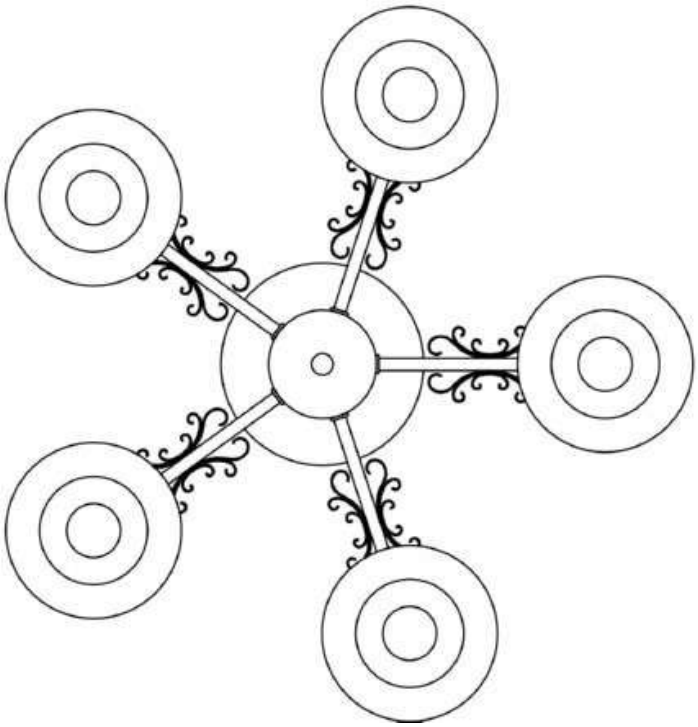A7695PL-5WG