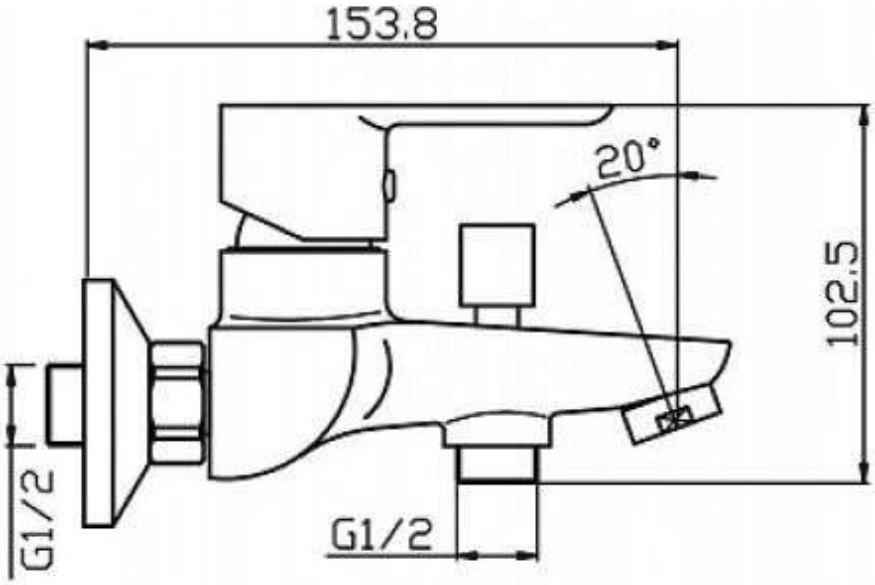
153.8
20°
102.5
G1/2
G1/2

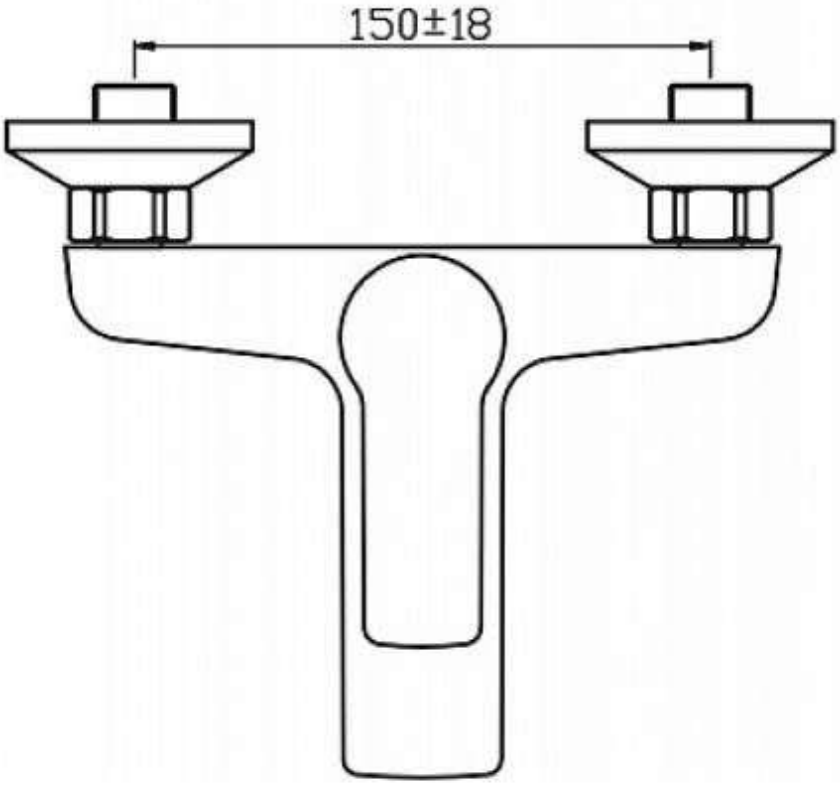
150±18