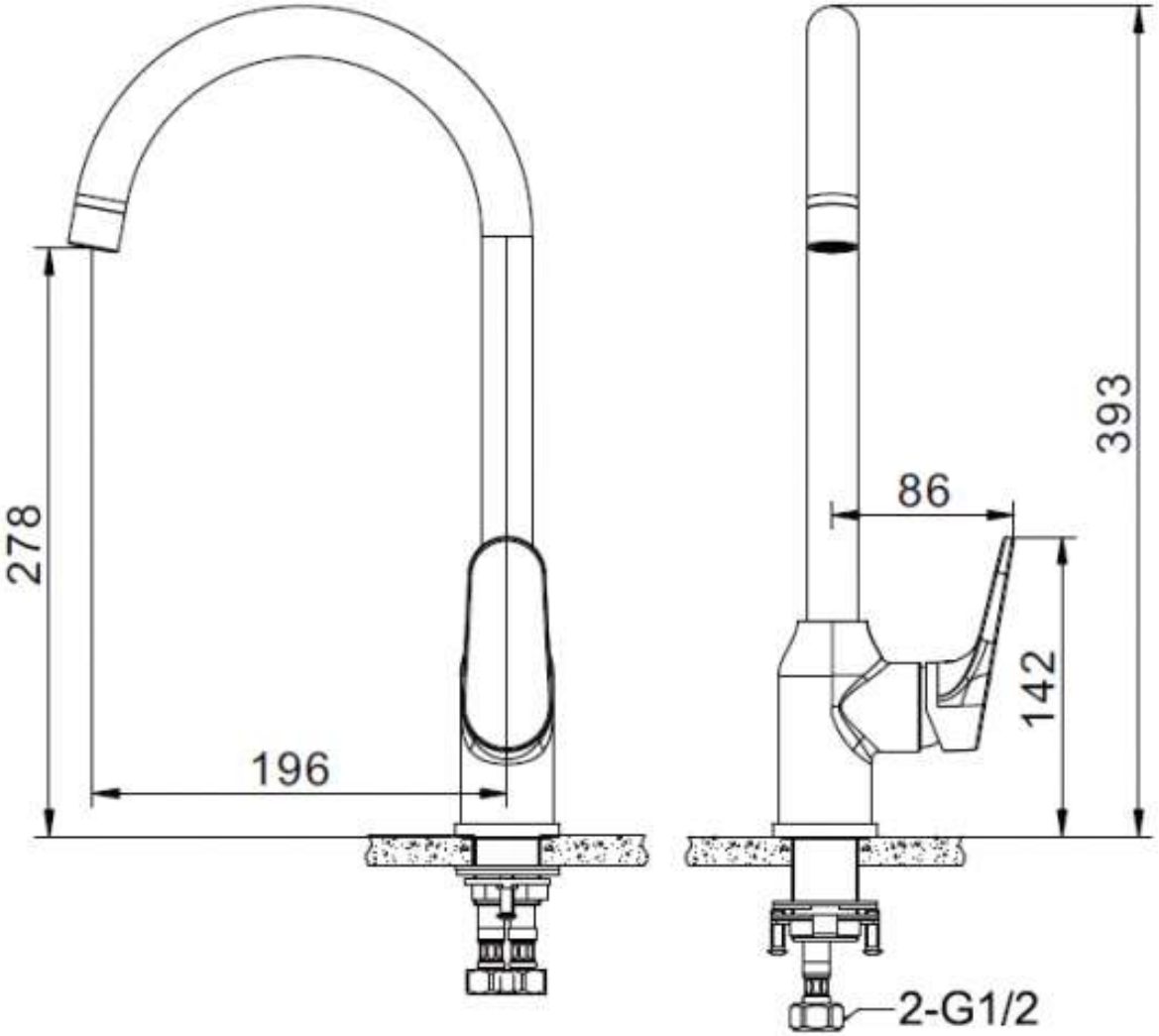
278
196
86
393
142
2-G1/2

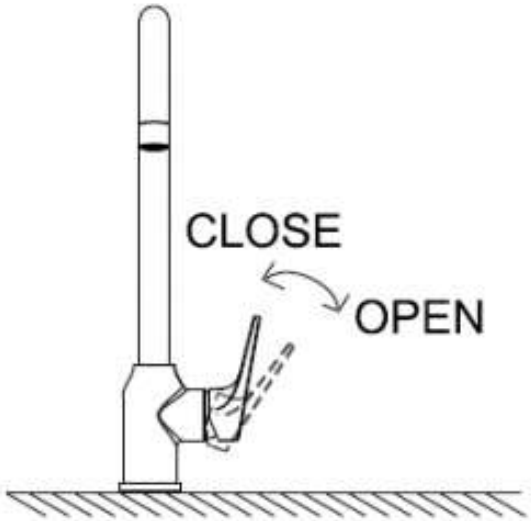
CLOSE
OPEN

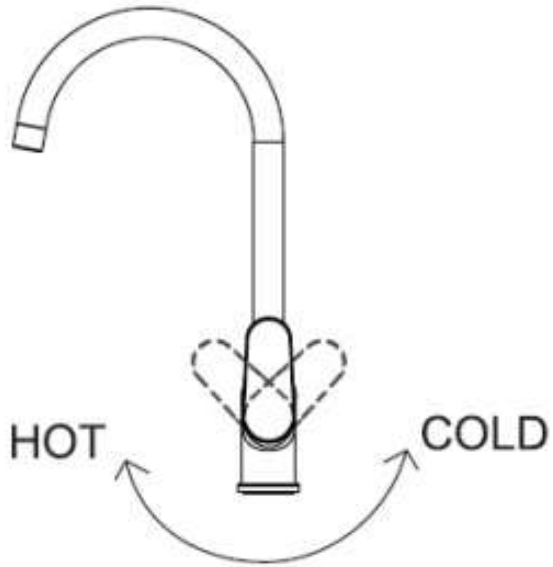
HOT
COLD